REVISIONS				
LTR	DESCRIPTION	E.C.N.	DATE	BY/APP'D
A	RELEASE TO DOCUMENT CONTROL	11420	03/26/96	MS/SM
B	COPLANARITY 0.1 WAS 0.08	11526	08/01/96	MS/

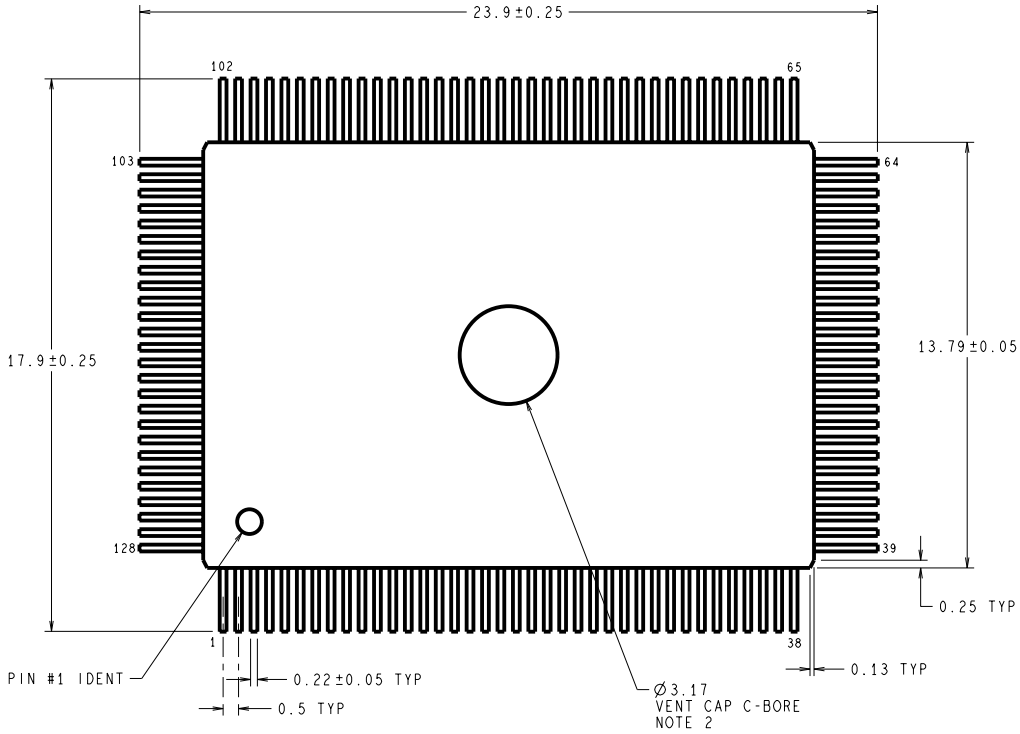

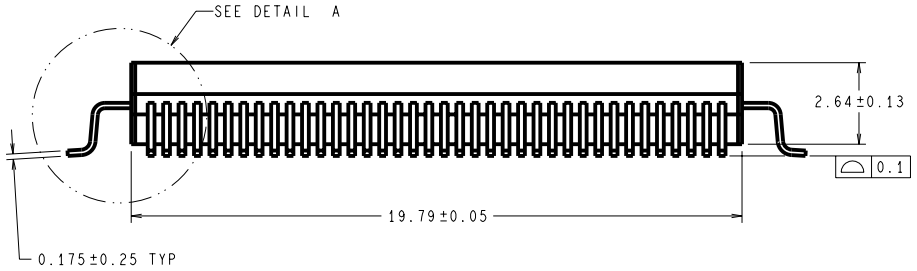

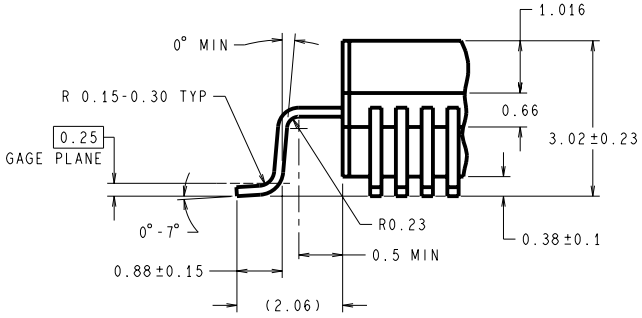

DETAIL A
TYPICAL, SCALE:15X
NOTE 2

DIMENSIONS ARE IN MILLIMETERS

NOTES: UNLESS OTHERWISE SPECIFIED

1. STANDARD LEAD FINISH: 5.08 MICROMETERS MINIMUM SOLDER PLATING (85/15) THICKNESS.
2. THE LEADS CAN BE FORMED FOR CAVITY UP OR DOWN:
   -THE VENT CAP WILL BE ON THE TOP FOR CAVITY UP (SHOWN)
   -THE VENT CAP WILL BE ON THE BOTTOM FOR CAVITY DOWN
3. REFERENCE: SWIRE TECHNOLOGIES DRAWING M128MK-9X, REV 0.

APPROVALS	DATE
DRAWN MARTA SUCHY	03/26/96
DFTG. CHK.	
ENGR. CHK.	

PROJECTION INCH [MM]

National Semiconductor
2900 Semiconductor dr, Santa Clara, CA 95052-8090

MQUAD,
14 X 20 X 2.7mm,
128 LEAD

SCALE	SIZE	DRAWING NUMBER	REV
N/A	C	MKT-ALE128A	B

DO NOT SCALE DRAWING | SHEET 1 of 1