REVISIONS				
LTR	DESCRIPTION	E.C.N.	DATE	BY/APP'D
A	RELEASE TO DOCUMENT CONTROL	12530	12/06/2000	SN/TL/AL

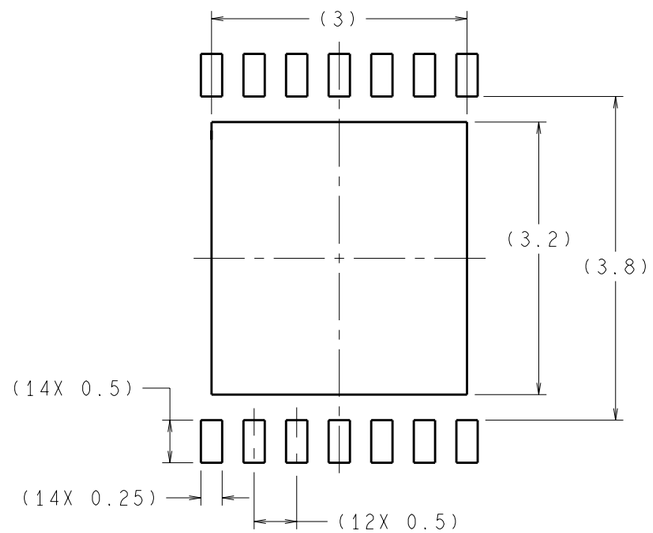

RECOMMENDED LAND PATTERN
1:1 RATIO WITH PKG SOLDER PADS

DIMENSIONS ARE IN MILLIMETERS

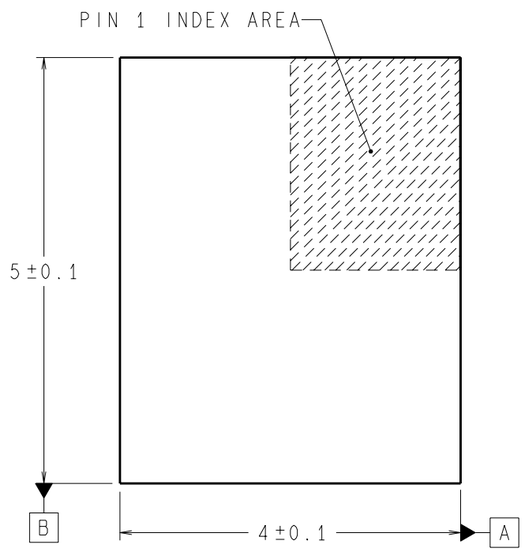

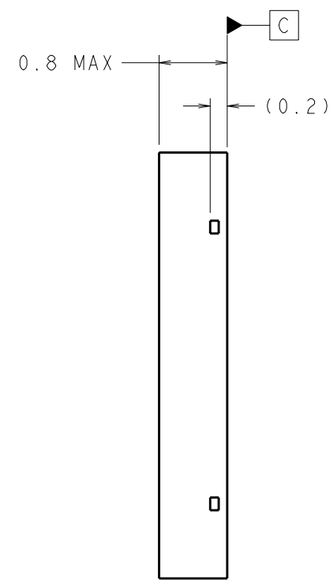

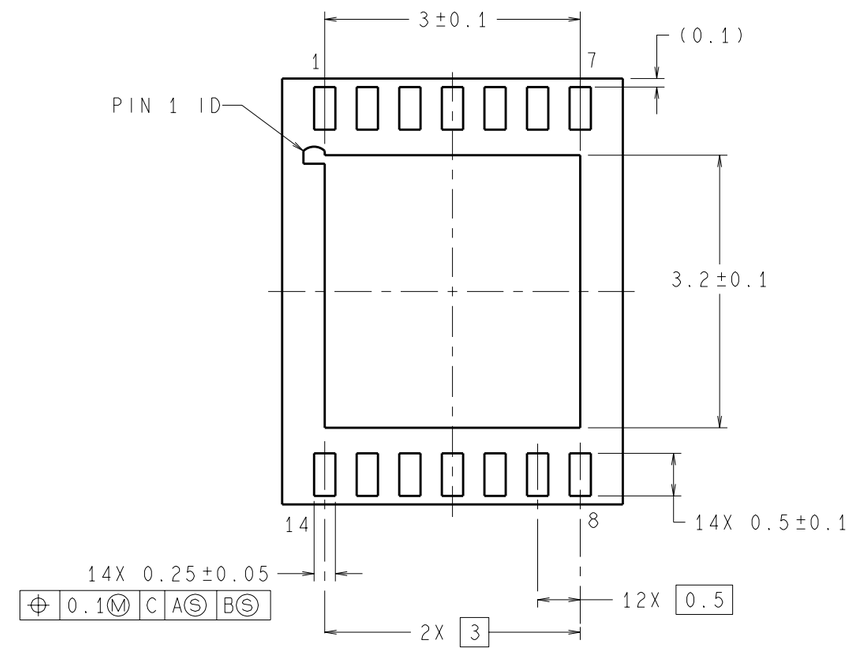

NOTES: UNLESS OTHERWISE SPECIFIED.

1. STANDARD LEAD FINISH TO BE 5.08 MICROMETERS MINIMUM LEAD/TIN (SOLDER) ON COPPER.

2. NO JEDEC REGISTRATION AS OF DECEMBER 2000.

APPROVALS	DATE
DRAWN N.SANTHIRAN & TL	12/06/2000
DFTG. CHK. THANH LEQUANG	12/06/2000
ENGR. CHK. ANTHONY LAW	12/06/2000

PROJECTION INCH [MM]

National Semiconductor
2900 Semiconductor Dr, Santa Clara, CA 95052-8090

LLP, PLASTIC, DUAL, 4 X 5 X 0.75 mm BODY, 14 LD, 0.5 mm PITCH

SCALE	SIZE	DRAWING NUMBER	REV
N/A	C	(SC)MKT-LDA14B	A

FORMERLY: N/A

SHEET 1 of 1