REVISIONS				
LTR	DESCRIPTION	E.C.N.	DATE	BY/APP'D
A	RELEASE TO DOCUMENT CONTROL.	11293	1/17/1996	MS/SL
B	TITLE: TQFP USED TO BE PQFP;UPDATE NOTE 3;ADD GEOMETRIC TOLERANCE	12317	12/02/1999	ACS/MS/RW

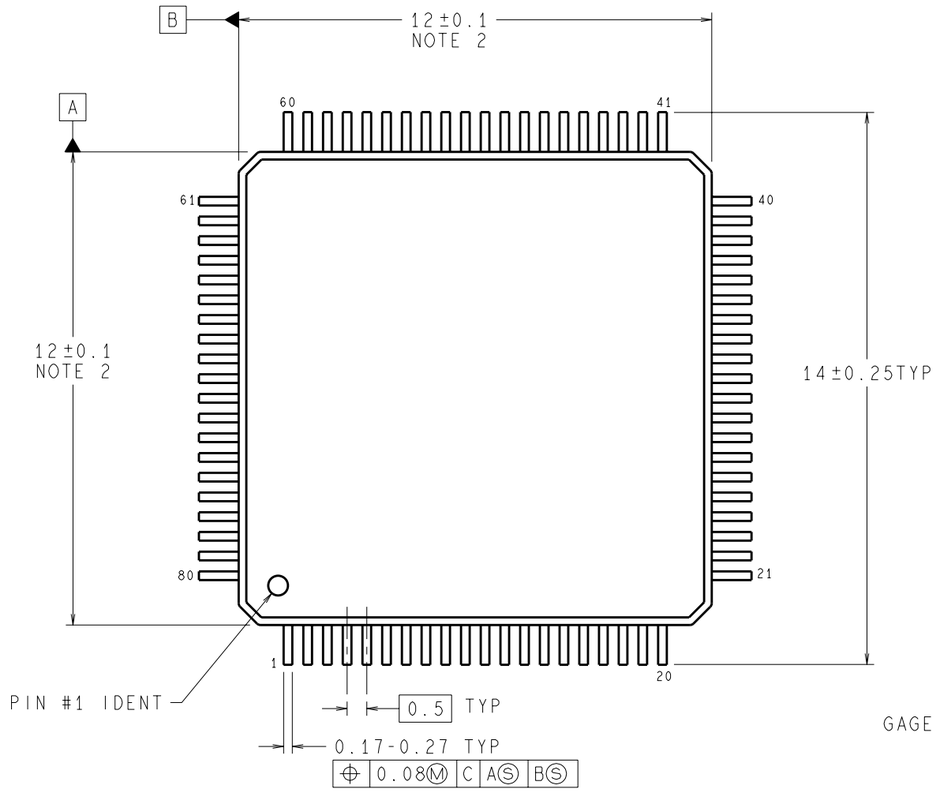

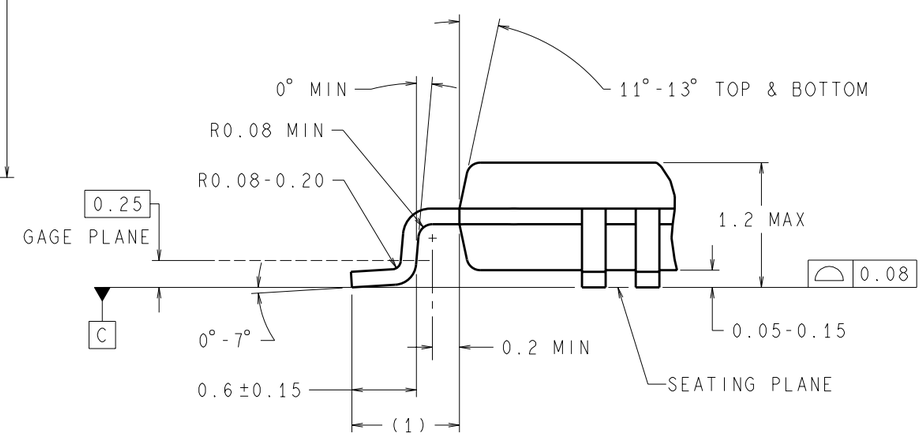

DETAIL A
TYP, SCALE:30X

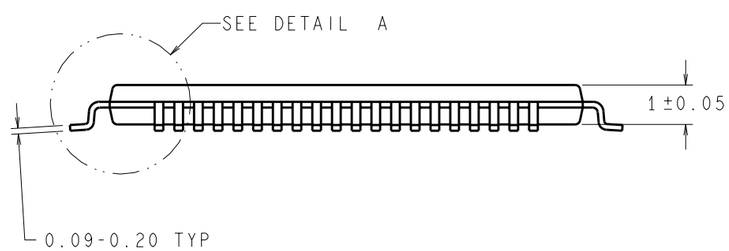

DIMENSIONS ARE IN MILLIMETERS

NOTES: UNLESS OTHERWISE SPECIFIED

1. STANDARD LEAD FINISH:
   7.62 MICROMETERS MINIMUM SOLDER PLATING (85/15)
   THICKNESS ON COPPER.
2. DIMENSION DOES NOT INCLUDE MOLD PROTRUSION.
   MAXIMUM ALLOWABLE MOLD PROTRUSION 0.25mm PER SIDE.
3. REFERENCE JEDEC REGISTRATION MS-026, VARIATION ADD,
   DATED FEB 1999.

APPROVALS	DATE
DRAWN MARTA SUCHY	07/10/1995
DFTG. CHK. THANH LEQUANG	12/07/1999
ENGR. CHK. RANDALL WALBERG	12/07/1999

PROJECTION INCH [MM]

National Semiconductor
2900 Semiconductor Dr, Santa Clara, CA 95052-8090

TQFP, JEDEC METRIC,
12 X 12 X 1.0mm,
80 LEAD

SCALE	SIZE	DRAWING NUMBER	REV
N/A	C	(SC)MKT-VHB80A	B

FORMERLY: SHEET 1 of 1