Part # **QFP184T19.7-2.6**
Leads **184** Pitch **0.5mm**
Body Size **28mmSQ**

Dwg **Q184P526.pdf**

Tel 1-714-898-3830
info@toplinedummy.com

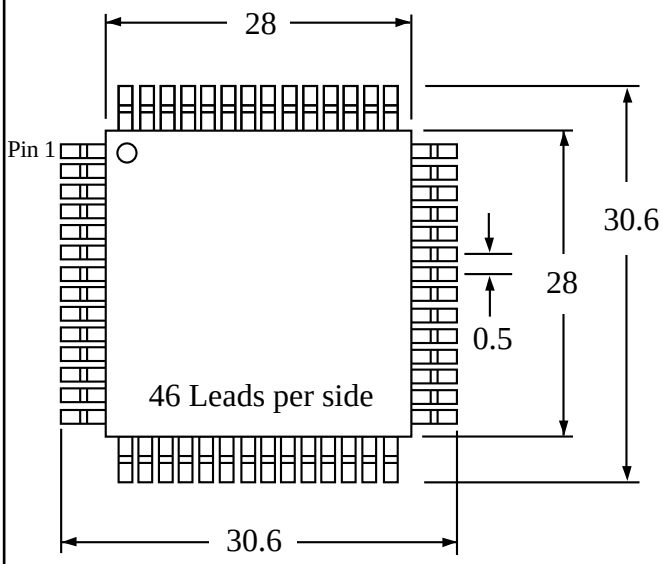

Top View

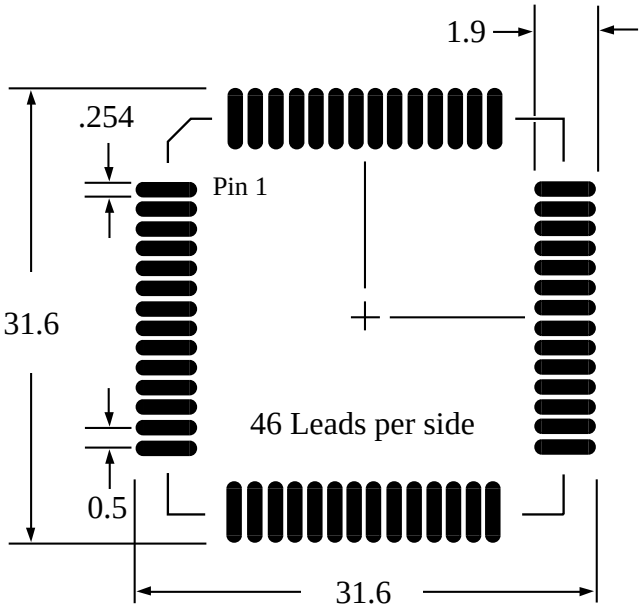

PC Board

Dimensions = mm

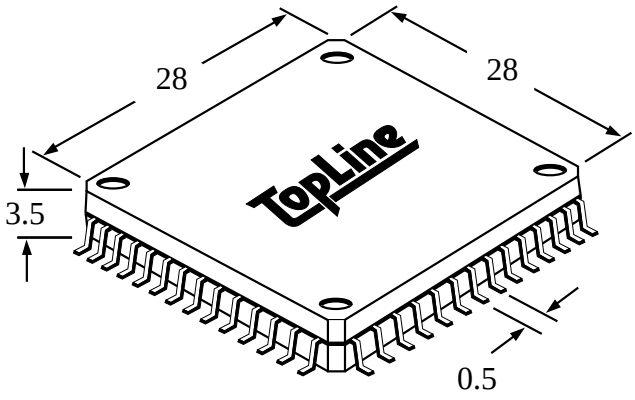

Quick View

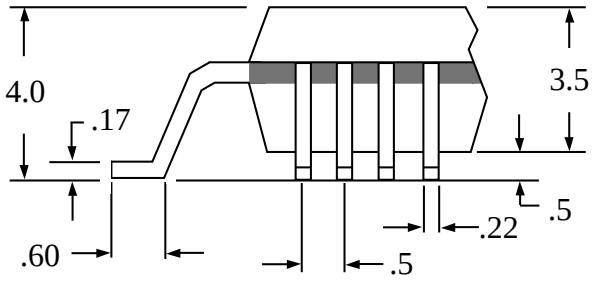

Side View Detail

TopLine makes no guarantee as to the accuracy of this document.

©2000 TopLine. All Rights Reserved.