Part # **QFP44T30-3.2**
Leads **44** Pitch **0.8mm**
Body Size **10mmSQ**

Dwg **Q44P832.pdf**

Tel 1-714-898-3830
info@toplinedummy.com

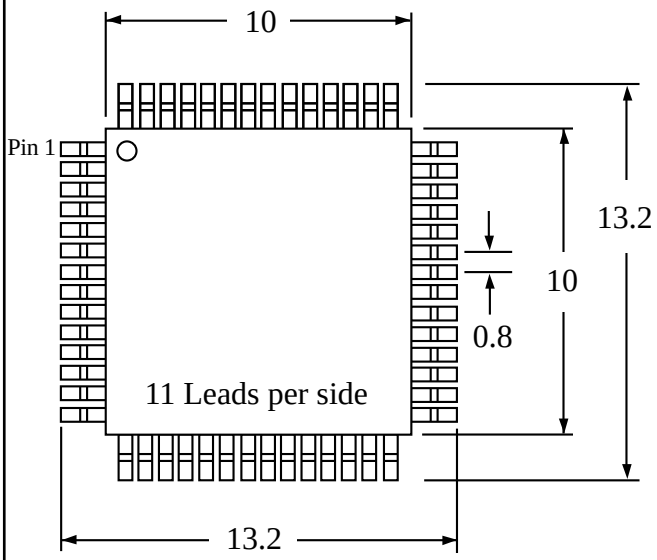

Top View

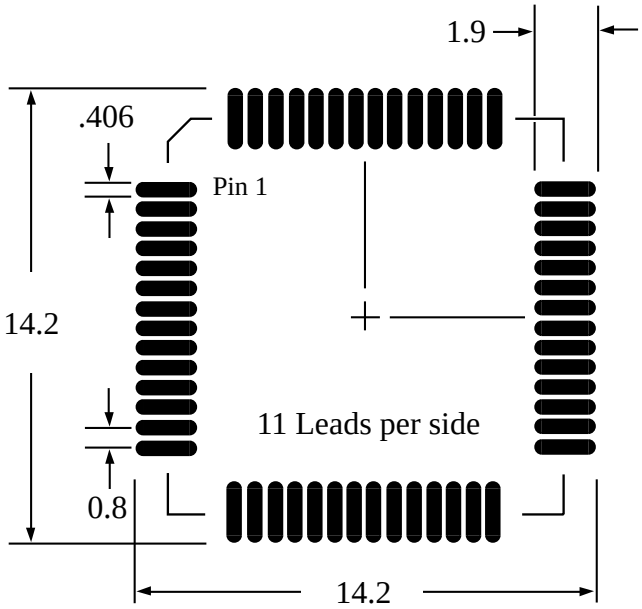

PC Board

Dimensions = mm

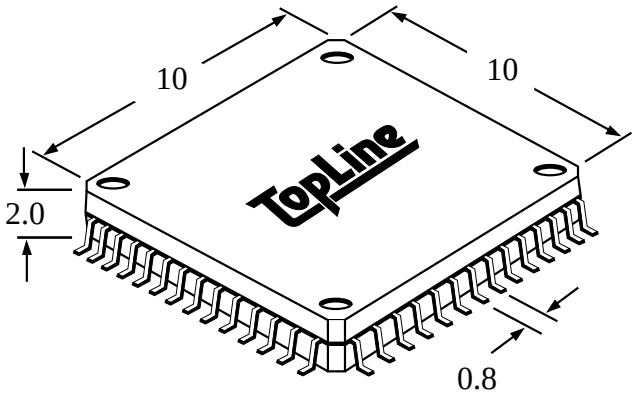

Quick View

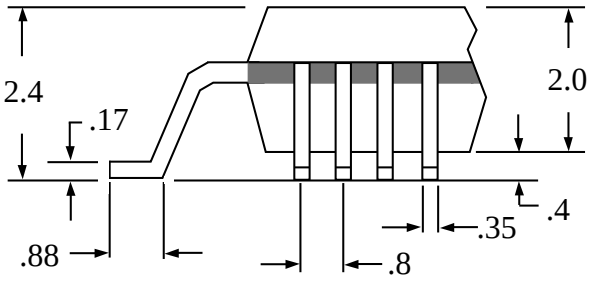

Side View Detail

TopLine makes no guarantee as to the accuracy of this document.

©2000 TopLine. All Rights Reserved.